Livsmedelsverket

Foods, hazards and risk – application of the risk analysis framework at the Swedish food Agency

Roland Lindqvist, Risk/benefit Department

Compounds detected in a food analysis: Would you like to eat this food?

Alcohols	Classification
Methanol	Toxic
Ethanol	Hazardous
Butyl alcohol	Hazardous
Isobutyl alcohol	Hazardous
Bensyl alcohol	Hazardous
Isoamyl alcohol	Hazardous

Acids	Classification
Formic acid	Corrosive
Acetic acid	Corrosive
Ftalic acid	Hazardous
Benzoic acid	Hazardous

Aldehydes, ketones	Classification
Acetaldehyde	Hazardous
Acetone	Hazardous
Acrolein	Toxic
Benzaldehyde	Hazardous
Furaldehyde	Toxic

Hazard and risk

Fara och risk

Swedish Food Agency - goals

- Safe foods and drinking water
- Fair practices in food trade
- Healthy and sustainable dietary habits

Regulations and recommendations

in regulations, directives, decrees, ordinances, guidance and advice issued by:

- The EU-commission and the EU council
- Codex Alimentarius
- Swedish Food Agency

Safe food - Control

- 90 000 control objects
- SFA about 1 400 direct control

Example safe meat:

All four-legged animals inspected before and after slaughter by official veterinarians in all slaughterhouses in Sweden

Communication

- www.livsmedelsverket.se
  ~ 24 000 visits/day
- Other media:
  ~ 1 100 contacts by journalists/year
- Facebook, Instagram, Twitter, blog
- Contact service (businesses and consumers) responds to ~ 15 200 questions/year
- Publications
- Courses, seminars, conferences

Background

- Foodborne illness continued large problem
- Internationalisation of trade
- ”Food scandals” 1990-talet; BSE in the UK, dioxins in Belgium

→ Lack of consumer trust for the food authorities

Developments - safe food and drinking water

- Development towards
  - Preventive measures (HACCP)
  - International ”criteria”
  - Producer responsibility
  - Targeted risk management
  - Risk analysis

Risk analysis

Approach to analyse and manage
activities with potential negative consequences

- International approach
- Codex
- Within EU (Regulation (EG) no 178/2002)

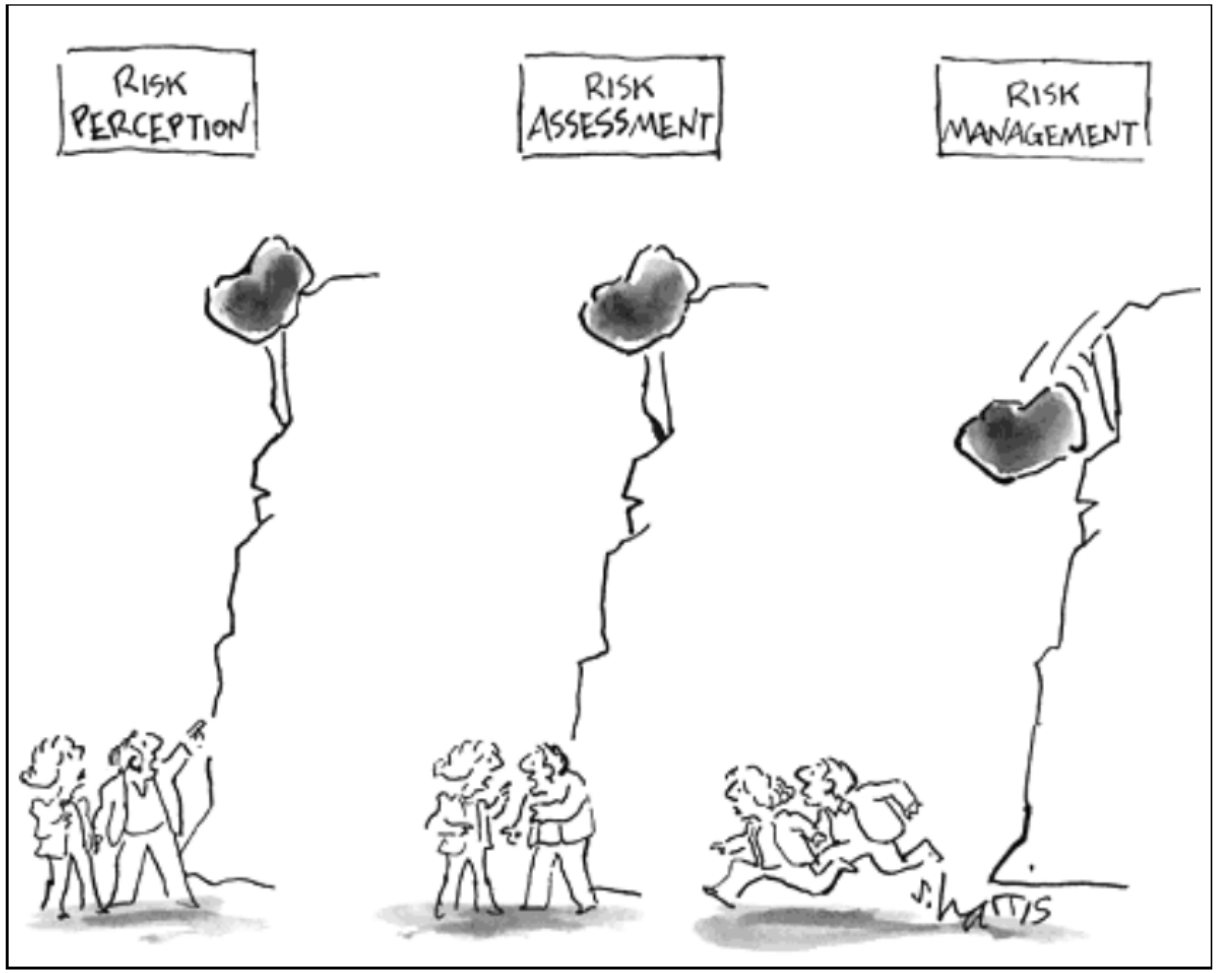

communication

Risk

36/37 = 97% probability

1/6 = 17% probability

Risk

- **Probability of a negative (health-)effect**
- **Consequences**

Publications describing aspects of the risk analysis framework by Codex

- Role of science and other factors in the Codex process (1995)
- Role of food safety risk assessment (1997)
- Risk analysis terms related to food safety (1997)
- Criteria for the consideration of “other factors” (2001)
- Working principles for risk analysis for application in the framework of the Codex Alimentarius, Ref. No. ALINORM 03/41 2003

Publications describing specific principles/policies of risk analysis

- Food additives and contaminants (2005/2007)
- Residues of veterinary drugs in foods (2007)
- Pesticide residues (2007)
- Nutrition (2009)
- Hygiene (2010)

Publications addressing national authorities

- Working Principles for Risk Analysis for Application by Governments – 2007

  - Regulation (EG) no 178/2002

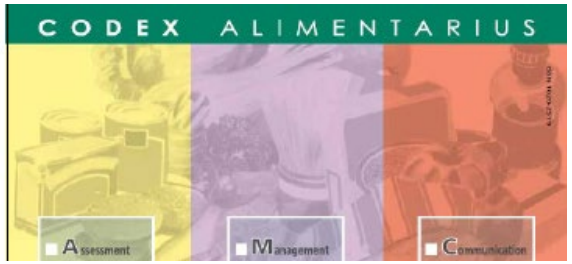

1.2.2002 SV Europeiska gemenskapernas officiella tidning L 31/1

I

(Rättsakter vilkas publicering är obligatorisk)

EUROPAPARLAMENTETS OCH RÅDETS FÖRORDNING (EG) nr 178/2002

av den 28 januari 2002

om allmänna principer och krav för livsmedelslagstiftning, om inrättande av Europeiska myndigheten för livsmedelssäkerhet och om förfaranden i frågor som gäller livsmedelssäkerhet

Risk analysis Codex framework

Science based

Risk assessment

1. Hazard identification
2. Hazard characterisation
3. Exposure assessment
4. Risk characterisation

Risk management

1. Preliminary activities
2. Evaluate measures
3. Implement measures
4. Monitoring and review

Policy based

Risk communication

Efsa proposal - Benefit:
”probability of a positive health effect and/or probability to reduce a negative health effect”

Risk analysis principles

- Science and risk based – (This is applicable to all components!)
- Requires the existence of a food safety system: Control authorities, laboratories, experts
- Transparent on policy-issues (value based)
- Holistic, address the whole chain from farm to fork
- Structured process with defined and separate roles and responsibilities

Risk analysis principles

- Participation of all stakeholders
- Transparency in all parts – also decision making
- Management weigh risk assessment and other legitimate factors
- Independent risk assessment

Independent?

Risk assessor *vs.* Risk manager

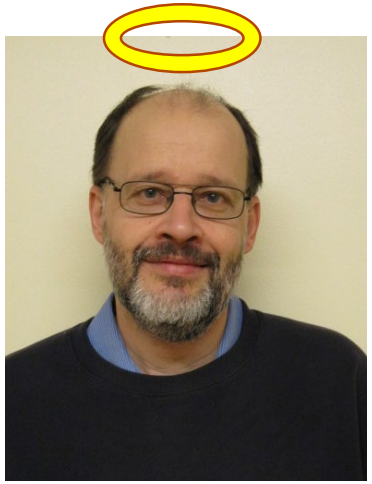

Risk manager *vs.* Risk assessor

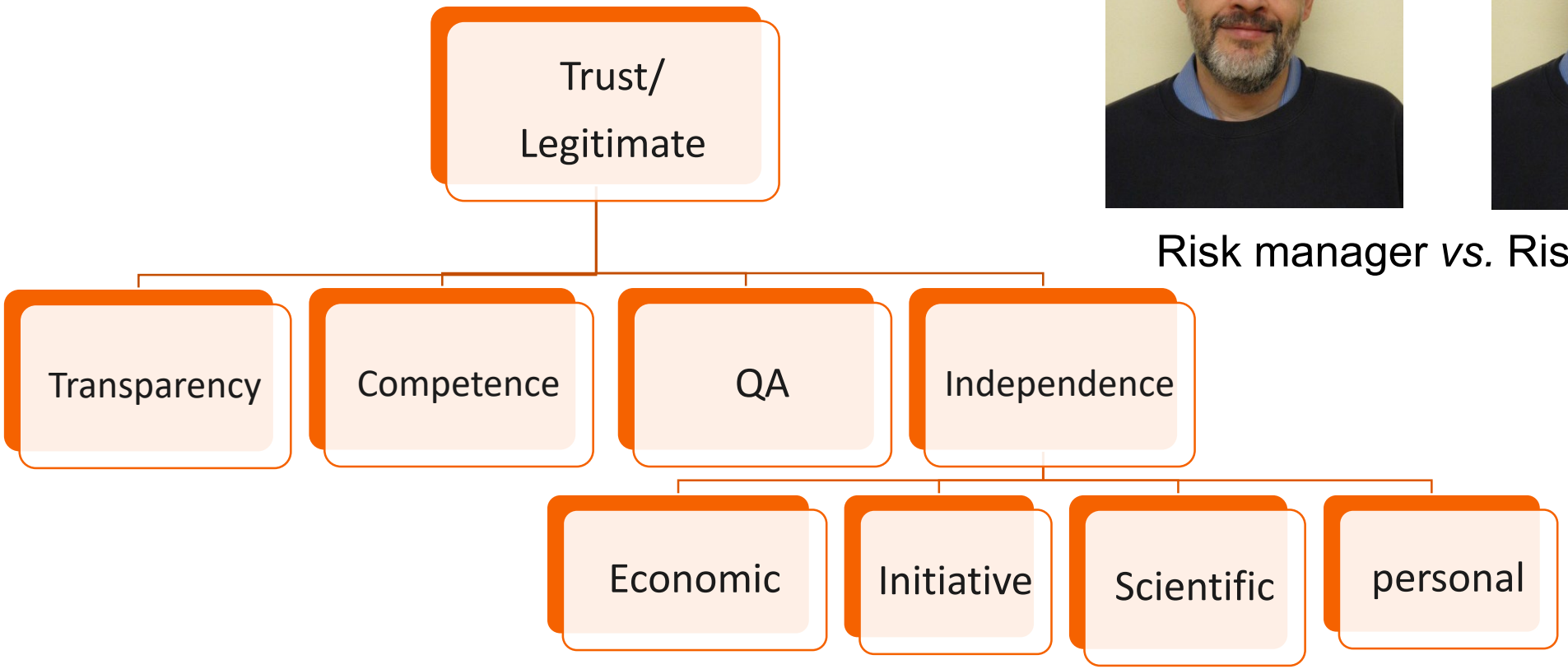

Risk assessment – 4 steps

1 Hazard identification

- Identification and description of hazard (microbe, compound), food, process, population, involved?

2 Hazard characterisation

- Which health effects result of exposure?
- Dose-response-relationship

3 Exposure assessment

- What is the probability of exposure?
- How much is consumed (number of cells/toxin= the dose)?

4 Risk characterisation

- Integrate steps 1-3, to estimate risk in relation to risk question
- Present uncertainties, and effects of assumptions and data gaps

Risk management measures

- Do nothing
- Food control
- Regulations (criteria, MRL, health based guidance values, marking, etc)
- Advice/recommendations/guidance
- Information
- Sale prohibition, removal from market
- Research, studies, filling knowledge gaps
- ….

Other legitimate factors - OLF

- Societal factors
- Economic factors
- Traditions
- Ethical considerations
- Environmental factors
- Control potential
- ……..

Transparency: How OLFs and risk assessment have been weighed to reach a decision should be communicated. The basis (evidence) for OLF should also be presented

Risk analysis principles

- Risk communication – not (only) information
  - .. should contain a clear description of the risk assessment, including the identification of uncertainties
  - .. provide a solid basis for understanding the risk management decision proposed, ..
  - .. Support public understanding of the decision process, and increase the trust in the safety and integrity of the food chain


Director General
Office Of The DG
Advisory Council
Science Division
Biology
Chemistry
Risk and Benefit Assessment
Sustainable Diets
Control Division
Central Sweden
Control Support
Food Industry and Border control
Northern Sweden
Southern Sweden
Governance and Guidance Division
Control Management
Corporate and Agency support
EU Coordination and Export
Safe Foods
Strategic Development and Support Division
Communications
Crisis Management and Civil Preparedness
Evaluation
Finance and Accounting
Human Resources
IT and Service
Legal Affairs

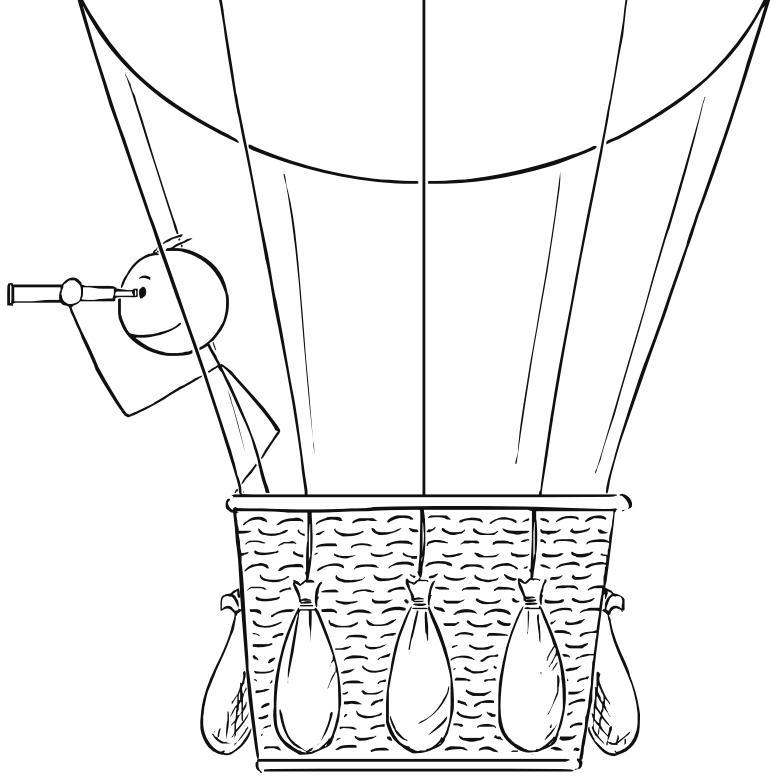

Interactions in the risk analysis process

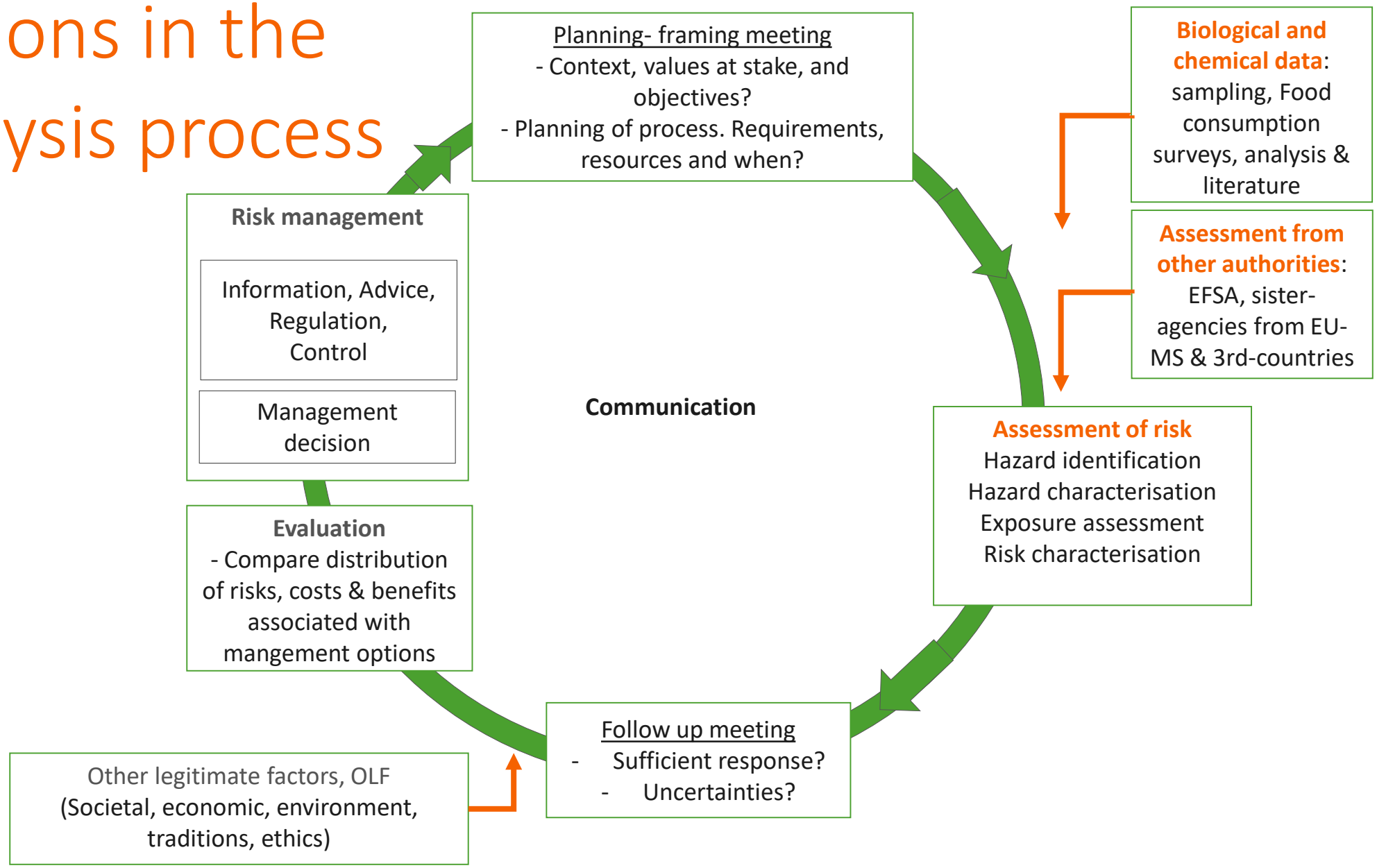

Livsmedelsverket

European outlook

- EU-COM – Risk manager
- EFSA – Risk assessment (both involved in risk communication)
- Sweden/SFA part of Efsas assessment resources – independent experts
  - Co-operation and harmonisation
  - Experts, data and capacity from MS
  - Assessment carried out in total or partly by MS, or scientific panels
- SFA Risk assessment and scientific support department:
  - National issues
  - Variation – problems and conditions often very different
  - Adaptation of Efsa-assessments carried out a EU-level
- Swedish Food Agency cannot cover all areas in depth

Risk analysis - core principles

- Process to reduce/minimise risk based on knowledge
- Food: Re-establish consumer trust in authorities
- The existence of a authorities and laboratories necessary
- Separation of roles and responsibilities – independent risk assessment
- Structured and consistent risk assessment and risk management
- Independent, Transparent, Consistent, Risk based, knowledge based – key words
- Risk/benefit for public health – management balance other legitimate factors (OLF)

Tack!

Roland Lindqvist

Risk- och nyttovärderingsavdelningen